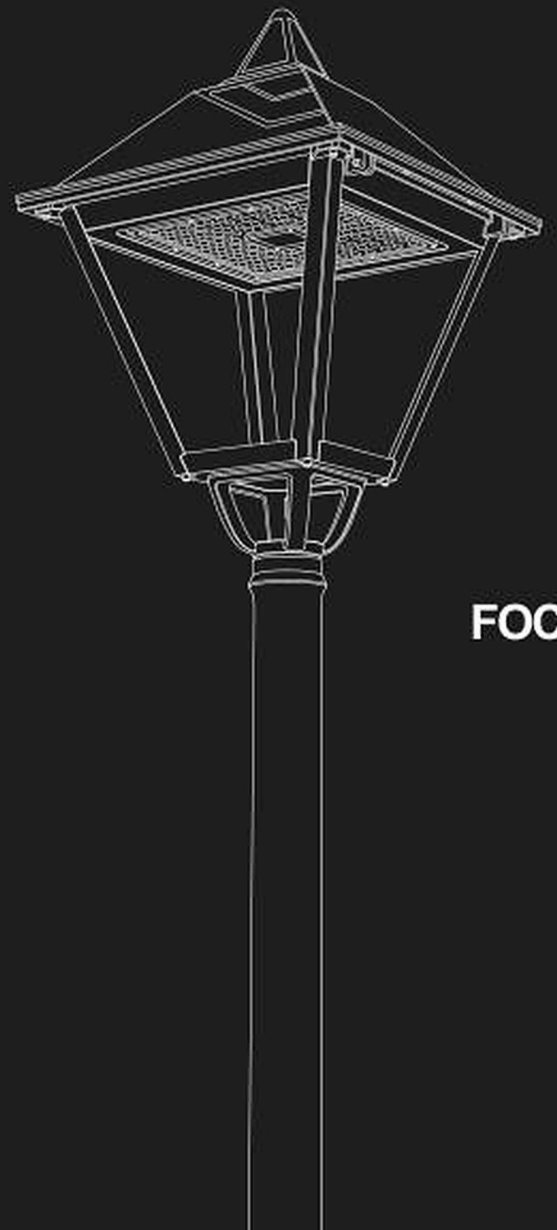

Die-casting aluminum material

FOCUS ON SOLAR GARDEN LANDSCAPE LIGHTS

2026 Version

ZhongShan Zhuocai (BiLLION) Lighting Co., Ltd.

Focusing on professional LED lighting and energy storage systems.

ADDRESS	No.11 Hengwang Road, Cao Yi, Guzhen Town, Zhongshan City, Guangdong Province, China
TEL	+86-0760-87568716
MOBILE	+86 188 9981 7259 / +86 138 2273 2820 WhatsApp / WeChat
EMAIL	angela@zocailighting.com

Angela
WhatsApp







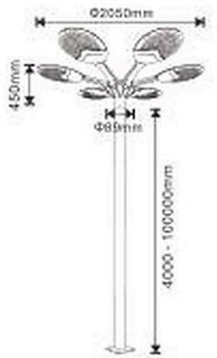

PRODUCT PARAMETERS

Model	ZC-TYD5109-6	ZC-TYD5109-3
Material	Die-casting aluminum	Die-casting aluminum
Solar panel	18V/150W	18V/75W
Battery	3.2V/180000mAh	3.2V/90000mAh
Quantity of LED chips	600PCS	300PCS
Charge time	3-5H	3-5H
Color temperature	3000-6500K	3000-6500K
Size	Φ2050*H450mm	Φ2050*H450mm



PRODUCT PARAMETERS

Model	ZC-TYD5105-6	ZC-TYD5105-3
Material	Die-casting aluminum	Die-casting aluminum
Solar panel	5V/96W	5V/48W
Battery	3.2V/120000mAh	3.2V/60000mAh
Quantity of LED chips	480PCS	240PCS
Charge time	3-5H	3-5H
Color temperature	3000-6500K	3000-6500K
Size	Φ1660*H435mm	Φ1660*H435mm



PRODUCT PARAMETERS

Model	ZC-TYD5106-6	ZC-TYD5106-3
Material	Die-casting aluminum	Die-casting aluminum
Solar panel	5V/66W	5V/33W
Battery	3.2V/80000mAh	3.2V/45000mAh
Quantity of LED chips	360PCS	180PCS
Charge time	3-5H	3-5H
Color temperature	3000-6500K	3000-6500K
Size	Φ1260*H390mm	Φ1260*H390mm











PRODUCT PARAMETERS

Model	ZC-TYD5105-6	ZC-TYD5105-3
Material	Die-casting aluminum	Die-casting aluminum
Voltage	220V	220V
Power	420W	210W
Quantity of LED chips	480PCS	240PCS
Rate frequency	50Hz	50Hz
Color temperature	3000-6500K	3000-6500K
Size	Φ1660*H435mm	Φ1660*H435mm







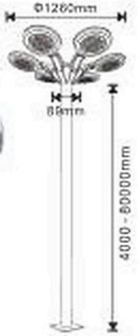

PRODUCT PARAMETERS

Model	ZC-TYD5106-6	ZC-TYD5106-3
Material	Die-casting aluminum	Die-casting aluminum
Voltage	220V	220V
Power	240W	150W
Quantity of LED chips	360PCS	180PCS
Rate frequency	50Hz	50Hz
Color temperature	3000-6500K	3000-6500K
Size	Φ1660*H435mm	Φ1660*H435mm



New





PRODUCT PARAMETERS

Model	ZC-TYD4208	ZC-TYD4206
Material	Die-casting aluminum+Tempered glass	Die-casting aluminum+Tempered glass
Solar panel	5V/62W	5V/33W
Battery	3.2V/100000mAh	3.2V/48000mAh
Quantity of LED chips	100PCS	60PCS
Charge time	3-5H	3-5H
Color temperature	3000-6500K	3000-6500K
Size	590*590*H405mm	Φ550*H510mm



New





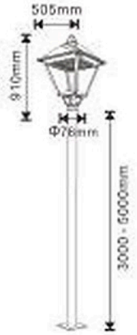

PRODUCT PARAMETERS

Model	ZC-TYD1109-1
Material	Die-casting aluminum
Solar panel	5V/33W
Battery	3.2V/48000mAh
Quantity of LED chips	120PCS
Charge time	3-5H
Color temperature	3000-6500K
Size	505*505*H910mm



New





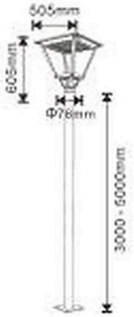

PRODUCT PARAMETERS

Model	ZC-TYD1109-2
Material	Die-casting aluminum
Solar panel	5V/33W
Battery	3.2V/48000mAh
Quantity of LED chips	120PCS
Charge time	3-5H
Color temperature	3000-6500K
Size	505*505*H605mm







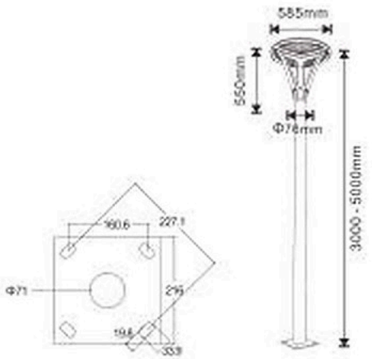

PRODUCT PARAMETERS

Model	ZC-TYD2609
Material	Die-casting aluminum
Solar panel	5V/33W
Battery	3.2V/45000mAh
Quantity of LED chips	150PCS
Charge time	3-5H
Color temperature	3000-6500K
Size	Φ585*H550mm







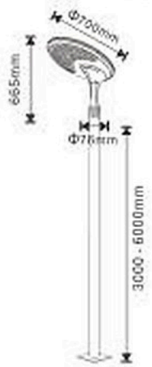

PRODUCT PARAMETERS

Model	ZC-TYD5108	ZC-TYD2808
Material	Die-casting aluminum	Die-casting aluminum
Solar panel	5V/25W	5V/38W
Battery	3.2V/36000mAh	3.2V/60000mAh
Quantity of LED chips	100PCS	150PCS
Charge time	3-5H	3-5H
Color temperature	3000-6500K	3000-6500K
Size	Φ630*Φ435*H495mm	Φ700*Φ520*H665mm







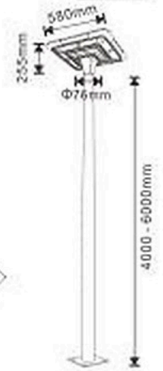

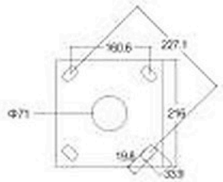

PRODUCT PARAMETERS

Model	ZC-TYD2505
Material	Die-casting aluminum
Solar panel	5V/45W
Battery	3.2V/60000mAh
Quantity of LED chips	200PCS
Charge time	3-5H
Color temperature	3000-6500K
Size	580*580*H255mm







PRODUCT PARAMETERS

Model	ZC-TYD2806	ZC-GGD0805
Material	Die-casting aluminum	Die-casting aluminum
Solar panel	5V/33W	5V/36W
Battery	3.2V/45000mAh	3.2V/45000mAh
Quantity of LED chips	160PCS	160PCS
Charge time	3-5H	3-5H
Color temperature	3000-6500K	3000-6500K
Size	Φ585*H215mm	Φ560*H230mm





PRODUCT PARAMETERS

Model	ZC-TYD2705	ZC-TYD2403
Material	Die-casting aluminum+PC	Die-casting aluminum+PC
Solar panel	5V/20W	5V/20W
Battery	3.2V/20000mAh	3.2V/20000mAh
Quantity of LED chips	80PCS	80PCS
Charge time	3-5H	3-5H
Color temperature	3000-6500K	3000-6500K
Size	φ480*H410mm	400*400*H420mm





PRODUCT PARAMETERS

Model	ZC-GGD2005-2	ZC-GGD2005-3	ZC-GGD2005-4
Material	Die-casting aluminum	Die-casting aluminum	Die-casting aluminum
Solar panel	5V/21W	5V/28W	5V/35W
Battery	3.2V/20000mAh	3.2V/30000mAh	3.2V/40000mAh
Quantity of LED chips	80PCS	120PCS	160PCS
Charge time	3-5H	3-5H	3-5H
Color temperature	3000-6500K	3000-6500K	3000-6500K
Size	Φ1070*H300mm	Φ960*H300mm	Φ1070*H300mm







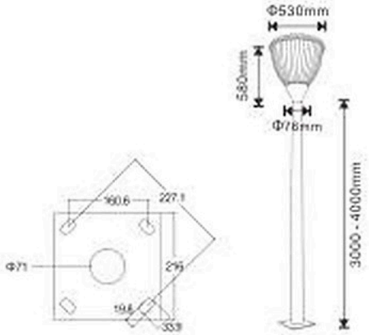

PRODUCT PARAMETERS

Model	ZC-TYD1105
Material	Die-casting aluminum+PC
Solar panel	5V/28W
Battery	3.2V/36000mAh
Quantity of LED chips	160PCS
Charge time	3-5H
Color temperature	3000-6500K
Size	Φ530*H580mm





PRODUCT PARAMETERS

Model	ZC-GGD003-1	ZC-GGD003-2	ZC-TYD1104
Material	Die-casting aluminum+PC	Die-casting aluminum+PC	Die-casting aluminum+PC
Solar panel	5V/25W	5V/16W	5V/25W
Battery	3.2V/30000mAh	3.2V/16000mAh	3.2V/30000mAh
Quantity of LED chips	160PCS	80PCS	160PCS
Charge time	3-5H	3-5H	3-5H
Color temperature	3000-6500K	3000-6500K	3000-6500K
Size	Φ530*H490mm	Φ410*H383mm	Φ530*H440mm









PRODUCT PARAMETERS

Model	ZC-TYD2508
Material	Die-casting aluminum+PC
Solar panel	5V/20W
Battery	3.2V/20000mAh
Quantity of LED chips	80PCS
Charge time	3-5H
Color temperature	3000-6500K
Size	410*410*H385mm





PRODUCT PARAMETERS

Model	ZC-GGD006
Material	Die-casting aluminum+PC
Solar panel	5V/20W
Battery	3.2V/20000mAh
Quantity of LED chips	80PCS
Charge time	3-5H
Color temperature	3000-6500K
Size	480*H405mm





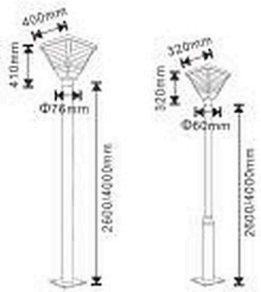



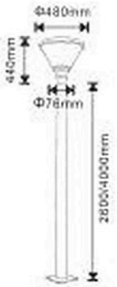



PRODUCT PARAMETERS

Model	ZC-GGD002-1	ZC-GGD002-2	ZC-GGD001
Material	Die-casting aluminum+PC	Die-casting aluminum+PC	Die-casting aluminum+PC
Solar panel	5V/20W	5V/12W	5V/20W
Battery	3.2V/20000mAh	3.2V/12000mAh	3.2V/20000mAh
Quantity of LED chips	80PCS	64PCS	80PCS
Charge time	3-5H	3-5H	3-5H
Color temperature	3000-6500K	3000-6500K	3000-6500K
Size	400*400*H410mm	320*320*H320mm	Φ480*H440mm

SOLAR ARK GARDEN LIGHT



PATENT PRODUCT ORIGINAL DESIGN

BRAND NEW BATTERY WITH 2000 TIMES CYCLE LIFE

HIGH CONVERSION MONO SOLAR PANEL

WHOLE NIGHT LIGHTING

TIME SWITCH

IP65

IR REMOTE CONTROL



MJ-SA1000
1000W

MJ-SA2000
2000W

Model	Battery	Solar Panel	Material	Dimension	CCT	Radar Sensor	Luminous Flux
MJ-SA1000	LiFePO4 36AH	Mono 4V/40W	Galvanized steel	510*510*80.5mm	7000-7500K	NO	2560lm
MJ-SA2000	LiFePO4 60AH	Mono 4V/65W	Galvanized steel	590*590*85.5mm	7000-7500K	NO	4100lm

ADVANTAGE:

1. Patent product,original design
2. Automobile sheet metal one-piece stamping shell, 10 years lifespan, super cost-effective
3. Hidden casting tube design, space saving up to 50%
4. Demountable design for easy maintenance
5. Equipped with Teijin PC lens from Japan,lighting efficiency increased by 10%
6. Bigger solar panel and battery to ensure 6m height lighting

CE RoHS FC CB

EXPLORER WARRIOR SOLAR GARDEN LIGHT



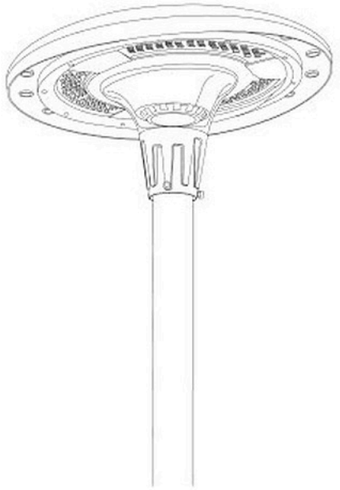









Bluetooth

RGB

MJ-EW800
800W

MJ-EW1200
1200W

Model	Battery	Solar Panel	Material	Dimension	CCT	Radar Sensor	Luminous Flux
MJ-EW800	LiFePO4 32Ah	Mono 4V/32W	AL+PC(Anti-UV)	Φ580*H248mm	WW / W / RGB	Optional	2029lm
MJ-EW1200	LiFePO4 48Ah	Mono 4V/40W	AL+PC(Anti-UV)	Φ580*H248mm	WW / W / RGB	Optional	2679lm

PATENT PRODUCT ORIGINAL DESIGN

BRAND NEW BATTERY WITH 2000 TIMES CYCLE LIFE

HIGH CONVERSION MONO SOLAR PANEL

WHOLE NIGHT LIGHTING

TIME SWITCH

IP65

IR REMOTE CONTROL

ADVANTAGE:

1. Slope design, not easy to accumulate dust, ensure charging efficiency
2. Easy installation, moveable casing tube reduces transportation cost
3. APP intelligent control, RGB music rhythm function
4. Intelligent extended function, compatible with other Bluetooth devices
5. Warm White/Cool White/16 million colors selectable, 360° beaming angle
6. High-efficiency charging solution, charging efficiency improved by 50%
7. Intelligent power management system, super long discharge time

CE RoHS FC CB



PRODUCT PARAMETERS

Model	ZC-TYD2808	ZC-TYD5108
Material	Die-casting aluminum	Die-casting aluminum
Solar panel	5V/38W	5V/25W
Battery	3.2V/60000mAh	3.2V/36000mAh
Quantity of LED chips	150PCS	100PCS
Working mode	Time control, Microwave sensor, Optical sensor	
Color temperature	3000-6500K	3000-6500K
Size	Φ700*Φ520*H665mm	Φ630*Φ435*H495mm



PRODUCT PARAMETERS

Model	ZC-TYD2705	ZC-TYD2403
Material	Die-casting aluminum	Die-casting aluminum
Solar panel	5V/20W	5V/20W
Battery	3.2V/20000mAh	3.2V/20000mAh
Quantity of LED chips	80PCS	80PCS
Working mode	Time control, Microwave sensor, Optical sensor	
Color temperature	3000-6500K	3000-6500K
Size	Φ480*H410mm	400*400*H420mm





PRODUCT PARAMETERS

Model	ZC-GGD3608
Material	Die-casting aluminum+PC
Solar panel	5V/10W
Battery	3.2V/12000mAh
Quantity of LED chips	60PCS
Charge time	3-5H
Color temperature	3000-6500K
Size	300*300*H1000~2600mm





PRODUCT PARAMETERS

Model	ZC-GGD4205
Material	Die-casting aluminum+PC
Solar panel	5V/10W
Battery	3.2V/12000mAh
Quantity of LED chips	60PCS
Charge time	3-5H
Color temperature	3000-6500K
Size	300*300*H1000~2600mm





PRODUCT PARAMETERS

Model	ZC-GGD4505-1
Material	Die-casting aluminum+PC
Solar panel	5V/4.5W
Battery	3.2V/8000mAh
Quantity of LED chips	30PCS
Charge time	3-5H
Color temperature	3000-6500K
Size	Φ260*H1000/2500mm



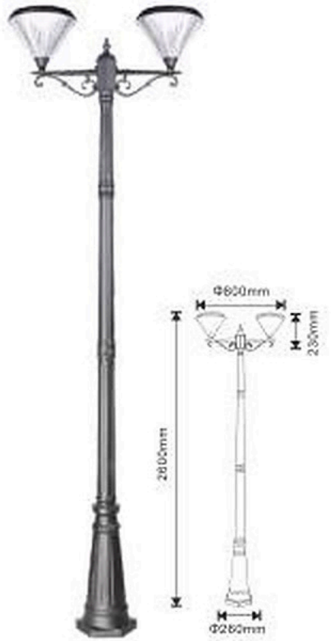





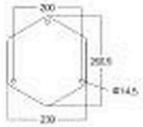

PRODUCT PARAMETERS

Model	ZC-GGD4505-2	ZC-GGD4505-3
Material	Die-casting aluminum+PC	Die-casting aluminum+PC
Solar panel	5V/9W	5V/13.5W
Battery	3.2V/16000	3.2V/24000mAh
Quantity of LED chips	60PCS	90PCS
Charge time	3-5H	3-5H
Color temperature	3000-6500K	3000-6500K
Size	Φ800*H2600mm	Φ750*H2600mm



PRODUCT PARAMETERS

Model	ZC-GGD0203-1	ZC-GGD0203-2	ZC-GGD0203-3
Material	Die-casting aluminum+PC	Die-casting aluminum+PC	Die-casting aluminum+PC
Solar panel	5V/4.5W	5V/9W	5V/13.5W
Battery	3.2V/8000mAh	3.2V/16000mAh	3.2V/24000mAh
Quantity of LED chips	30PCS	60PCS	90PCS
Charge time	3-5H	3-5H	3-5H
Color temperature	3000-6500K	3000-6500K	3000-6500K
Size	Φ260*H1000~2500mm	Φ800*H2600mm	Φ750*H2600mm



PRODUCT PARAMETERS

Model	ZC-GGD4105-1	ZC-GGD4105-2	ZC-GGD4105-3
Material	Die-casting aluminum+PC	Die-casting aluminum+PC	Die-casting aluminum+PC
Solar panel	5V/4.5W	5V/9W	5V/13.5W
Battery	3.2V/8000mAh	3.2V/16000mAh	3.2V/24000mAh
Quantity of LED chips	30PCS	60PCS	90PCS
Charge time	3-5H	3-5H	3-5H
Color temperature	3000-6500K	3000-6500K	3000-6500K
Size	Φ260*H1000~2500mm	Φ800*H2600mm	Φ750*H2600mm



PRODUCT PARAMETERS

Model	ZC-GGD2806-1	ZC-GGD2806-2	ZC-GGD2806-3
Material	Die-casting aluminum+PC	Die-casting aluminum+PC	Die-casting aluminum+PC
Solar panel	5V/5W	5V/10W	5V/15W
Battery	3.2V/8000mAh	3.2V/16000mAh	3.2V/24000mAh
Quantity of LED chips	30PCS	60PCS	90PCS
Charge time	3-5H	3-5H	3-5H
Color temperature	3000-6500K	3000-6500K	3000-6500K
Size	235*235*H1000~2500mm	Φ795*H2600mm	Φ750*H2600mm



PRODUCT PARAMETERS

Model	ZC-GGD2806-1	ZC-GGD2806-2	ZC-GGD2806-3
Material	Die-casting aluminum+PC	Die-casting aluminum+PC	Die-casting aluminum+PC
Solar panel	5V/5W	5V/10W	5V/15W
Battery	3.2V/8000mAh	3.2V/16000mAh	3.2V/24000mAh
Quantity of LED chips	30PCS	60PCS	90PCS
Charge time	3-5H	3-5H	3-5H
Color temperature	3000-6500K	3000-6500K	3000-6500K
Size	235*235*H1000~2500mm	Φ795*H2600mm	Φ750*H2600mm











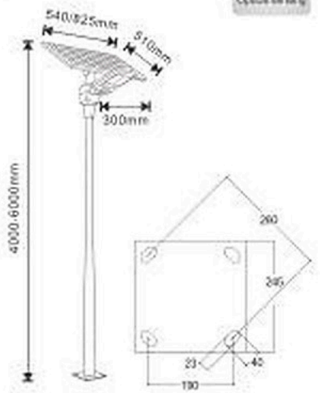

PRODUCT PARAMETERS

Model	ZC-XYD424	ZC-XYD436	ZC-XYD448
Material	Die-casting aluminum	Die-casting aluminum	Die-casting aluminum
Solar panel	5V/40W	5V/50W	5V/60W
Battery	3.2V/20000mAh	3.2V/40000mAh	3.2V/60000mAh
Quantity of LED chips	24PCS	48PCS	76PCS
Charge time	3-5H	3-5H	3-5H
Color temperature	3000-6500K	3000-6500K	3000-6500K
Size	610*200*390mm	610*200*390mm	610*200*390mm











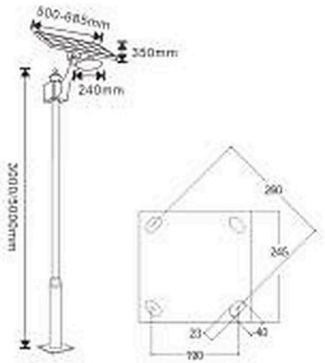

PRODUCT PARAMETERS

Model	ZC-TED0112	ZC-TED0118	ZC-TED0124
Material	Die-casting aluminum	Die-casting aluminum	Die-casting aluminum
Solar panel	5V/25W	5V/35W	5V/40W
Battery	3.2V/20000mAh	3.2V/30000mAh	3.2V/40000mAh
Quantity of LED chips	120PCS	120PCS	120PCS
Charge time	3-5H	3-5H	3-5H
Color temperature	3000-6500K	3000-6500K	3000-6500K
Size	400*350*25mm	600*350*25mm	650*350*25mm



PRODUCT PARAMETERS

Model	ZC-TGD0215	ZC-TGD0224	ZC-TGD0230
Material	Die-casting aluminum	Die-casting aluminum	Die-casting aluminum
Solar panel	5V/25W	5V/35W	5V/40W
Battery	3.2V/20000mAh	3.2V/30000mAh	3.2V/40000mAh
Quantity of LED chips	24PCS	24PCS	24PCS
Charge time	3-5H	3-5H	3-5H
Color temperature	3000-6500K	3000-6500K	3000-6500K
Size	400*350*25mm	600*350*25mm	650*350*25mm



PRODUCT PARAMETERS

Model	ZC-TYD1215	ZC-TED1224	ZC-TED1230
Material	Die-casting aluminum	Die-casting aluminum	Die-casting aluminum
Solar panel	5V/25W	5V/35W	5V/40W
Battery	3.2V/20000mAh	3.2V/30000mAh	3.2V/40000mAh
Quantity of LED chips	120PCS	120PCS	120PCS
Charge time	3-5H	3-5H	3-5H
Color temperature	3000-6500K	3000-6500K	3000-6500K
Size	400*350*25mm	600*350*25mm	650*350*25mm

SOLAR MORNING GLORY LAWN LIGHT



PATENT PRODUCT ORIGINAL DESIGN

BRAND NEW BATTERY WITH 2000 TIMES CYCLE LIFE

HIGH CONVERSION MONO SOLAR PANEL

WHOLE NIGHT LIGHTING

TIME SWITCH

IP65

IR REMOTE CONTROL

3 COLOR SELECTABLE



Model	Battery	Solar Panel	Material	Dimension	CCT	Radar Sensor	Luminous Flux
MJ-MG-P200	3.2V/4AH	ø196mm-4V/3.5W	ABS+PC	211.3*201mm	WW/NW/CW	NO	312lm
MJ-MG-W220	3.2V/4AH	ø196mm-4V/3.5W	ABS+PC	245.15*221mm	WW/NW/CW	NO	312lm
MJ-MG-G625	3.2V/4AH	ø196mm-4V/3.5W	ABS+PC	211.3*635.5mm	WW/NW/CW	NO	312lm

ADVANTAGE:

1. Three-color dimming
2. Multiple installation options: column head, pole, wall-mounted (the base features a unique ground plug installation structure for poles and column heads, both of which can be equipped with ground plugs)
3. UV-resistant PC lamp housing made from Japanese Teijin material, never yellows
4. Modular pole design for minimal packaging volume and easy installation
5. Larger battery, larger solar panel, higher brightness, and longer battery life compared to similar products
6. Waterproof design with removable cover for easy maintenance

SOLAR DIAMOND LAWN LIGHT

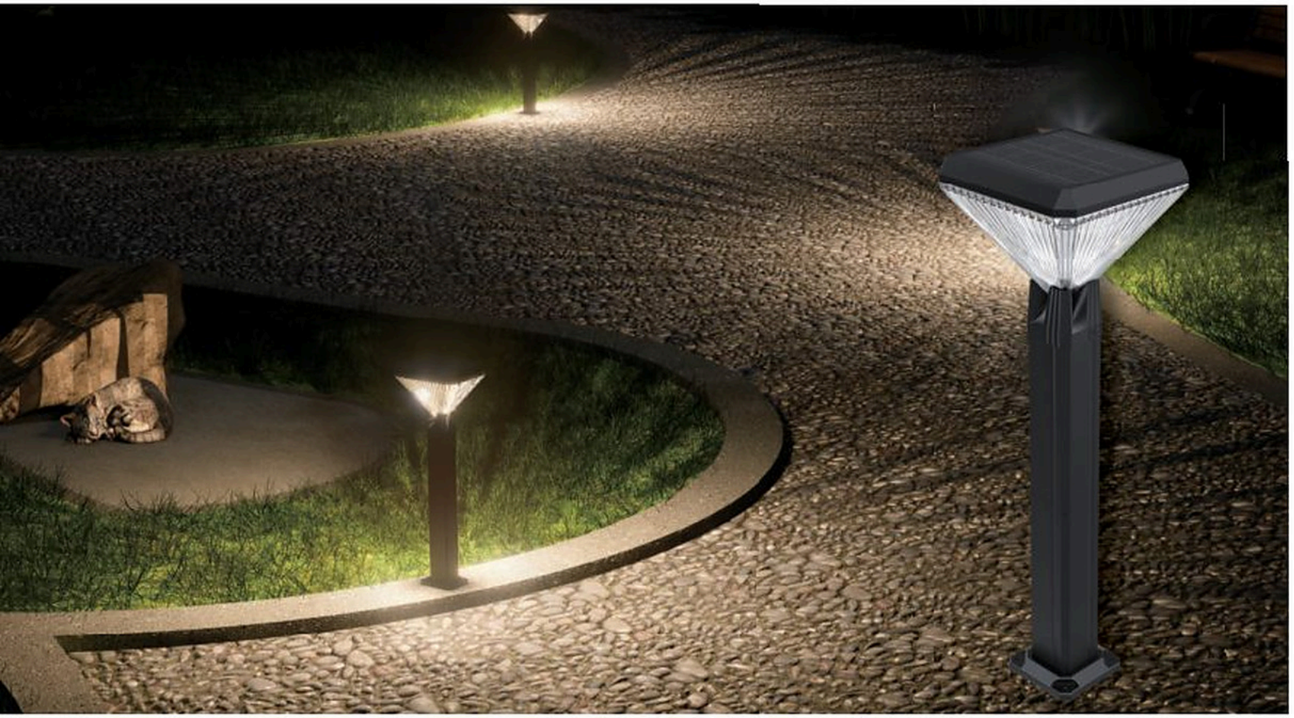

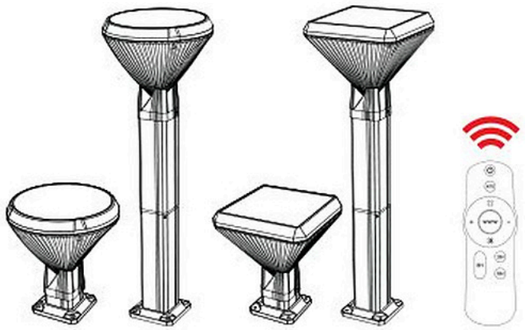



MJ-DA275 MJ-DA780 MJ-DB275 MJ-DB780

Model	Battery	Solar Panel	Material	Dimension	CCT	Radar Sensor	Luminous Flux
MJ-DA275	LiFePO4 8.8AH	Mono 4V/5.5W	AL+PC(Anti-UV)	Φ261*275mm	WW/NW/CW	NO	582lm
MJ-DA780	LiFePO4 8.8AH	Mono 4V/5.5W	AL+PC(Anti-UV)	Φ261*780mm	WW/NW/CW	NO	582lm
MJ-DB275	LiFePO4 8.8AH	Mono 4V/7.5W	AL+PC(Anti-UV)	241*241*275mm	WW/NW/CW	NO	672lm
MJ-DB780	LiFePO4 8.8AH	Mono 4V/7.5W	AL+PC(Anti-UV)	241*241*780mm	WW/NW/CW	NO	672lm

PATENT PRODUCT ORIGINAL DESIGN

BRAND NEW BATTERY WITH 2000 TIMES CYCLE LIFE

HIGH CONVERSION MONO SOLAR PANEL

WHOLE NIGHT LIGHTING

TIME SWITCH

IP65

IR REMOTE CONTROL

3 COLOR SELECTABLE

ADVANTAGE:

1. Patent product, original design
2. 3 color selectable to meet different needs
3. Brand new battery to ensure whole night lighting
4. Multiple installation way, floor and pillar standing
5. All in one package with extension pole for space saving.
6. Convenient installation, home DIY application

CE RoHS FC CB





PRODUCT PARAMETERS

Model	ZC-CPD0804	ZC-CPD3004
Material	Die-casting aluminum+PC	Die-casting aluminum+PC
Solar panel	5V/2W	5V/2W
Battery	3.2V/3000mAh	3.2V/3000mAh
Quantity of LED chips	20PCS	20PCS
Charge time	3-5H	3-5H
Color temperature	3000-6500K	3000-6500K
Size	Φ185*H500/700mm	Φ185*H500/700mm



PRODUCT PARAMETERS

Model	ZC-CPD0907	ZC-CPD0705
Material	Die-casting aluminum+PC	Die-casting aluminum+PC
Solar panel	5V/2W	5V/2W
Battery	3.2V/3000mAh	3.2V/3000mAh
Quantity of LED chips	20PCS	20PCS
Charge time	3-5H	3-5H
Color temperature	3000-6500K	3000-6500K
Size	Φ185*H500/700mm	Φ185*H500/700mm



New









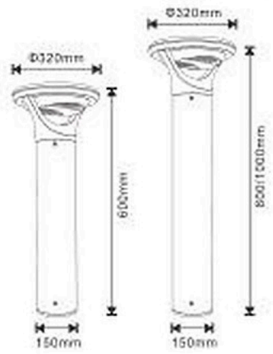

PRODUCT PARAMETERS

Model	ZC-CPD9208
Material	Die-casting aluminum+PC
Solar panel	5V/8.5W
Battery	3.2V/12000mAh
Quantity of LED chips	60PCS
Charge time	3-5H
Color temperature	3000-6500K
Size	320*150*H600/800/1000mm



New







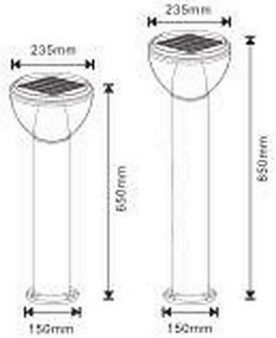

PRODUCT PARAMETERS

Model	ZC-CPD3006
Material	Die-casting aluminum+PC
Solar panel	5V/4.5W
Battery	3.2V/6000mAh
Quantity of LED chips	40PCS
Charge time	3-5H
Color temperature	3000&6500K
Size	235*150*H650/850mm

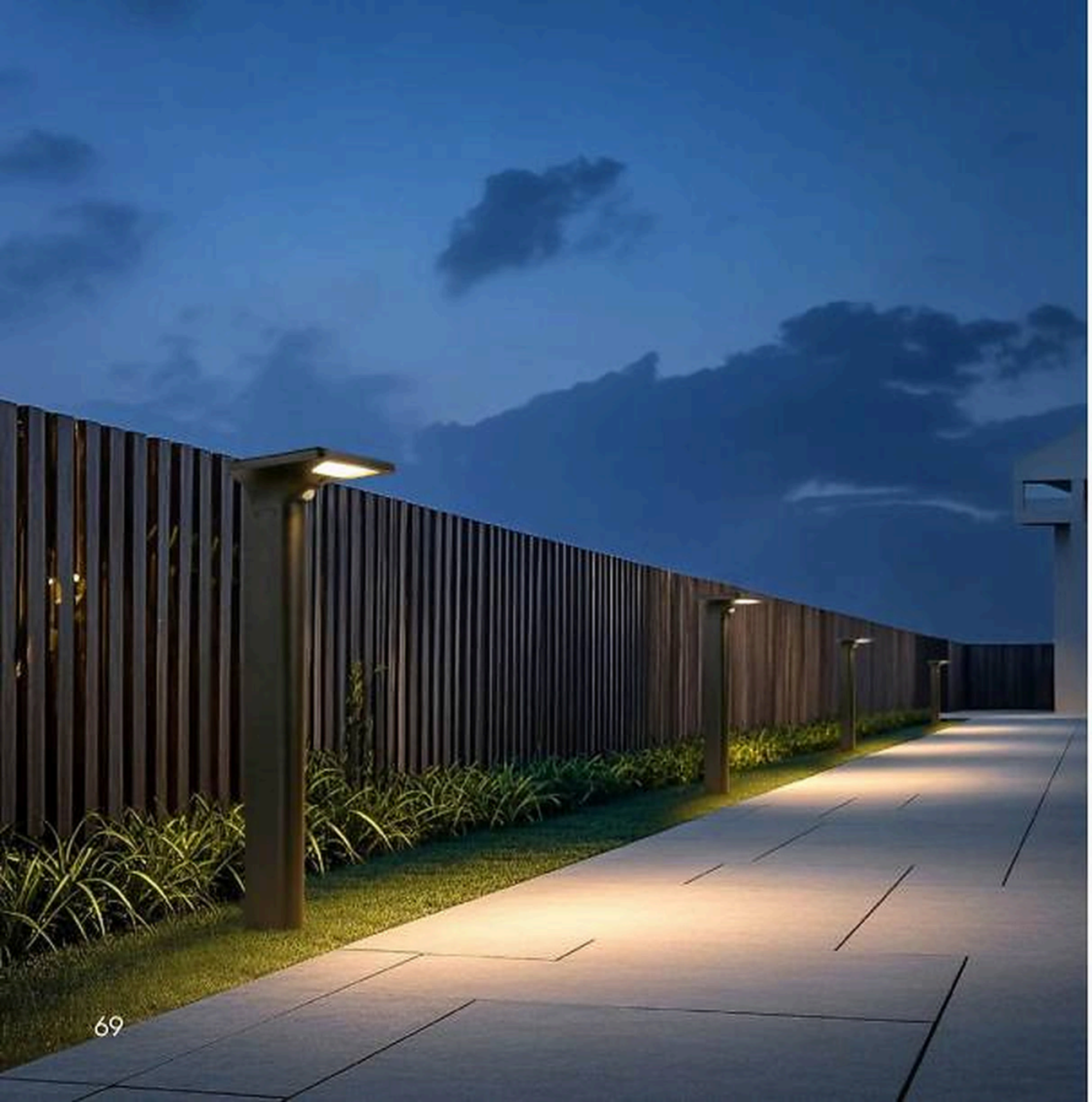

New



PRODUCT PARAMETERS

Model	ZC-CPD3005
Material	Die-casting aluminum
Solar panel	5V/5W
Battery	3.2V/8000mAh
Quantity of LED chips	8PCS
Charge time	3-5H
Color temperature	3000-6500K
Size	240*200*H600/800/1000mm









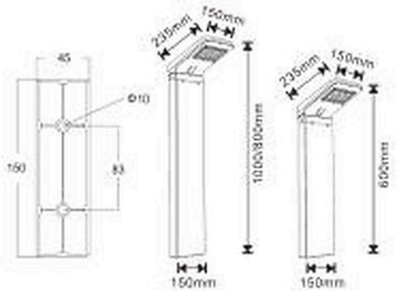

PRODUCT PARAMETERS

Model	ZC-CPD3008
Material	Die-casting aluminum
Solar panel	5V/5W
Battery	3.2V/8000mAh
Quantity of LED chips	30PCS
Charge time	3-5H
Color temperature	3000-6500K
Size	235*150*H600/800/1000mm









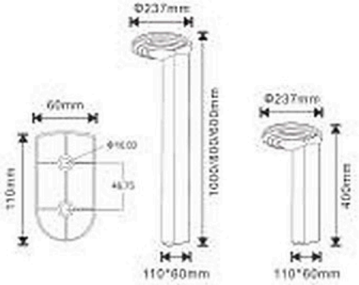

PRODUCT PARAMETERS

Model	ZC-CPD8804
Material	Die-casting aluminum
Solar panel	5V/4.5W
Battery	3.2V/6000mAh
Quantity of LED chips	40PCS
Charge time	3-5H
Color temperature	3000-6500K
Size	237*140*H400/600/800/1000mm



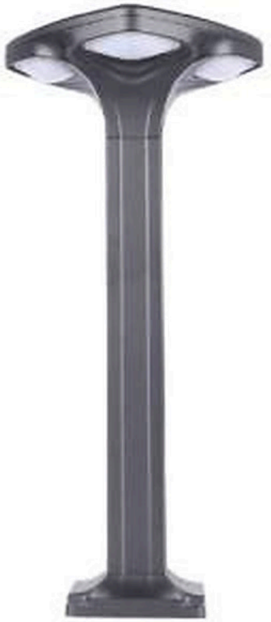



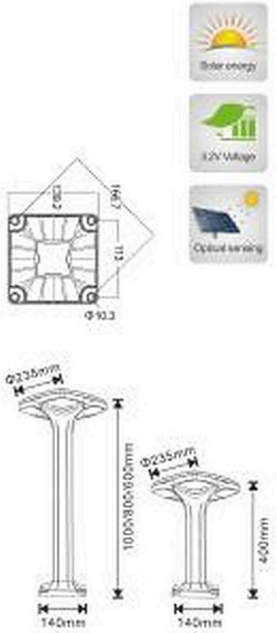

PRODUCT PARAMETERS

Model	ZC-CPD2804
Material	Die-casting aluminum
Solar panel	5V/5W
Battery	3.2V/6000mAh
Quantity of LED chips	40PCS
Charge time	3-5H
Color temperature	3000-6500K
Size	235*140*H400/600/800/1000mm









PRODUCT PARAMETERS

Model	ZC-CPD540S	ZC-CPD1004
Material	Die-casting aluminum+PC	Die-casting aluminum+PC
Solar panel	5V/4.5W	5V/4.5W
Battery	3.2V/8000mAh	3.2V/8000mAh
Quantity of LED chips	30PCS	12PCS
Charge time	3-5H	3-5H
Color temperature	3000-6500K	3000-6500K
Size	Φ260*Φ120*H500/750mm	Φ260*Φ120*H450/700mm









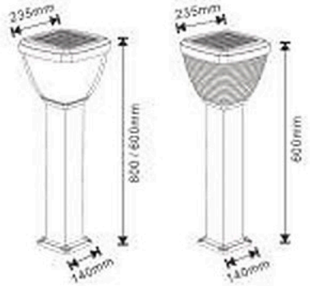

PRODUCT PARAMETERS

Model	ZC-CPD1106-1	ZC-CPD1106-2
Material	Die-casting aluminum+PC	Die-casting aluminum+PC
Solar panel	5V/5W	5V/5W
Battery	3.2V/8000mAh	3.2V/8000mAh
Quantity of LED chips	30PCS	30PCS
Charge time	3-5H	3-5H
Color temperature	3000-6500K	3000-6500K
Size	235*140*H600/800mm	235*140*H600/800mm





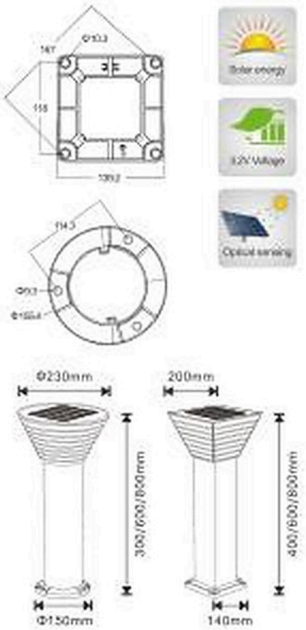

PRODUCT PARAMETERS

Model	ZC-CPD3004	ZC-CPD5004
Material	Die-casting aluminum+PC	Die-casting aluminum+PC
Solar panel	5V/4.5W	5V/5W
Battery	3.2V/6000mAh	3.2V/6000mAh
Quantity of LED chips	20PCS	30PCS
Charge time	3-5H	3-5H
Color temperature	3000-6500K	3000-6500K
Size	Φ230*Φ150*H300/600/800mm	200*140*H400/600/800mm









PRODUCT PARAMETERS

Model	ZC-CPD4104	ZC-CPD2204
Material	Die-casting aluminum+PC	Die-casting aluminum+PC
Solar panel	5V/4.5W	5V/4.5W
Battery	3.2V/8000mAh	3.2V/8000mAh
Quantity of LED chips	30PCS	30PCS
Charge time	3-5H	3-5H
Color temperature	3000-6500K	3000-6500K
Size	Φ260*Φ150*H350/650/850mm	Φ260*Φ150*H350/650/850mm











PRODUCT PARAMETERS

Model	ZC-CPD2104
Material	Die-casting aluminum+PC
Solar panel	5V/4.5W
Battery	3.2V/8000mAh
Quantity of LED chips	30PCS
Charge time	3-5H
Color temperature	3000-6500K
Size	Φ260*Φ120*H500/750mm

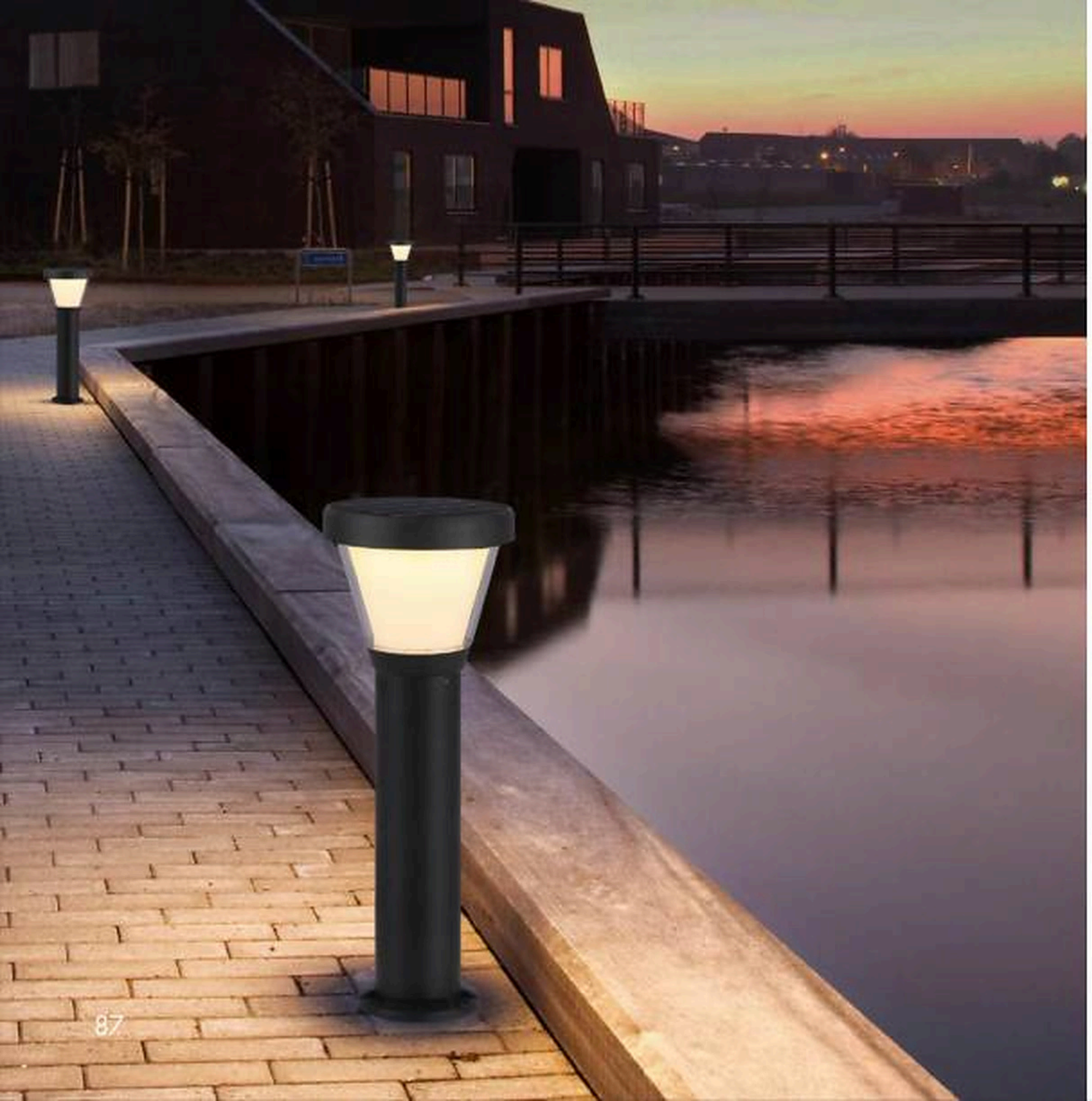





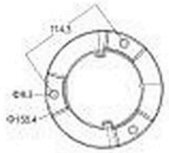

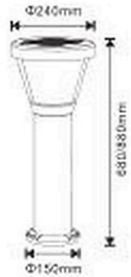





PRODUCT PARAMETERS

Model	ZC-CPD2106
Material	Die-casting aluminum+PC
Solar panel	5V/4.5W
Battery	3.2V/8000mAh
Quantity of LED chips	30PCS
Charge time	3-5H
Color temperature	3000-6500K
Size	Φ240*Φ150*H380/680/880mm



New





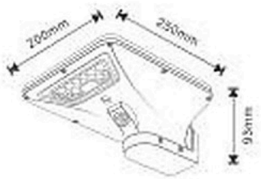

PRODUCT PARAMETERS

Model	ZC-BD3005
Material	Die-casting aluminum
Solar panel	5V/5W
Battery	3.2V/8000mAh
Quantity of LED chips	8PCS
Charge time	3-5H
Color temperature	3000-6500K
Size	250*200*H93mm





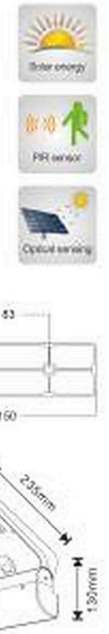

PRODUCT PARAMETERS

Model	ZC-BD1006
Material	Die-casting aluminum
Solar panel	5V/5W
Battery	3.2V/8000mAh
Quantity of LED chips	30PCS
Charge time	3-5H
Color temperature	3000-6500K
Size	235*150*H130mm







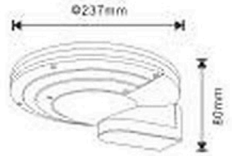

PRODUCT PARAMETERS

Model	ZC-BD1008
Material	Die-casting aluminum
Solar panel	5V/4.5W
Battery	3.2V/6000mAh
Quantity of LED chips	40PCS
Charge time	3-5H
Color temperature	3000-6500K
Size	Φ237*H80mm



New







PRODUCT PARAMETERS

Model	ZC-BD3006
Material	Die-casting aluminum
Solar panel	5V/4.5W
Battery	3.2V/6000mAh
Quantity of LED chips	40PCS
Charge time	3-5H
Color temperature	3000-6500K
Size	Φ237*H80mm





PRODUCT PARAMETERS

Model	ZC-BD4005	ZC-BD1004
Material	Die-casting aluminum+PC	Die-casting aluminum+PC
Solar panel	5V/4.5W	5V/4.5W
Battery	3.2V/8000mAh	3.2V/8000mAh
Quantity of LED chips	30PCS	12PCS
Charge time	3-5H	3-5H
Color temperature	3000-6500K	3000-6500K
Size	Φ260*H370mm	Φ260*H330mm









PRODUCT PARAMETERS

Model	ZC-BD2104
Material	Die-casting aluminum+PC
Solar panel	5V/4.5W
Battery	3.2V/8000mAh
Quantity of LED chips	30PCS
Charge time	3-5H
Color temperature	3000-6500K
Size	Φ260*H360mm

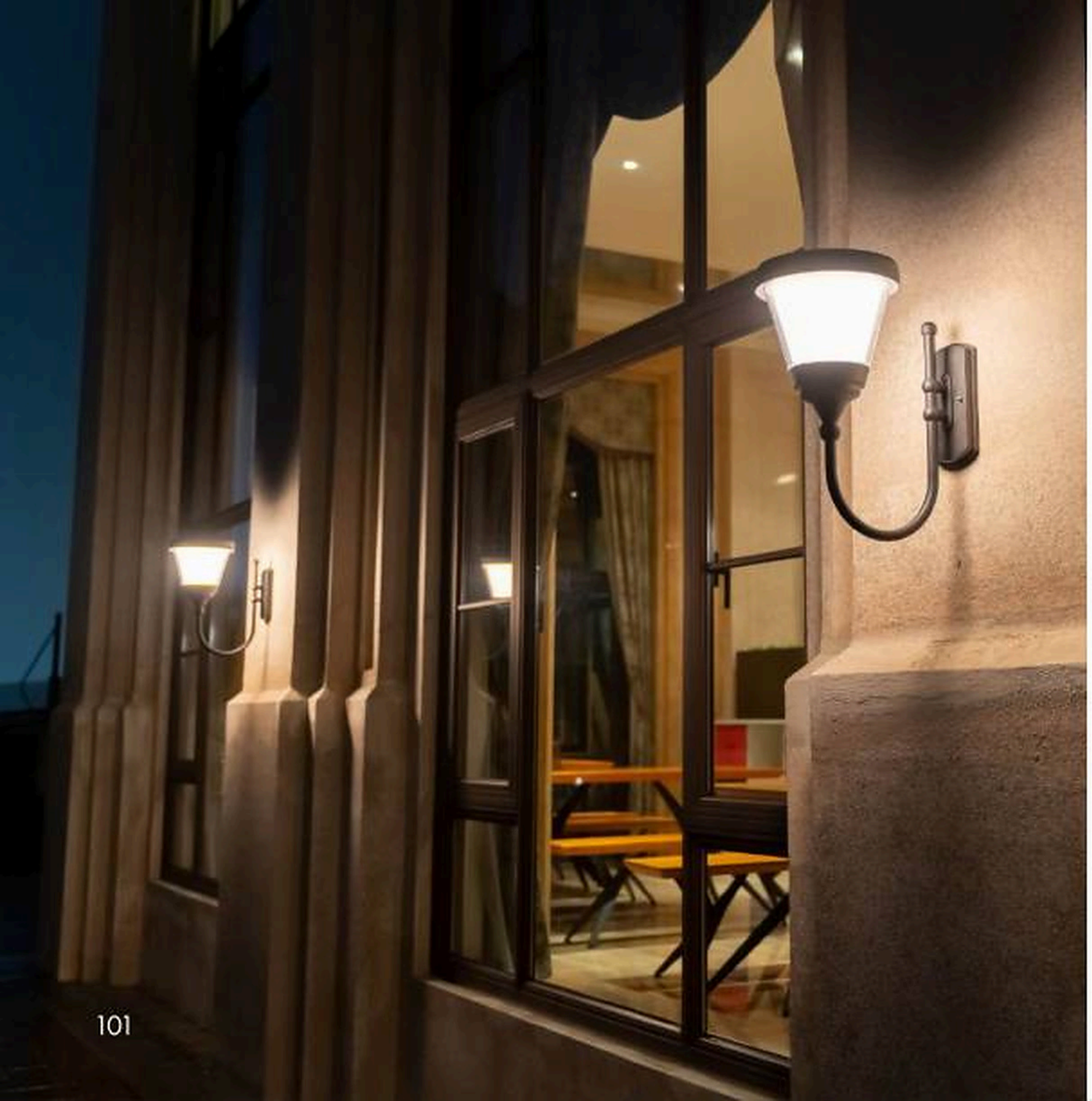



PRODUCT PARAMETERS

Model	ZC-BD2106-1	ZC-BD2106-2
Material	Die-casting aluminum+PC	Die-casting aluminum+PC
Solar panel	5V/4.5W	5V/4.5W
Battery	3.2V/8000mAh	3.2V/8000mAh
Quantity of LED chips	30PCS	30PCS
Charge time	3-5H	3-5H
Color temperature	3000-6500K	3000-6500K
Size	Φ240*H450mm	Φ240*H320mm





PRODUCT PARAMETERS

Model	ZC-BD4001	ZC-BD1104
Material	Die-casting aluminum+PC	Die-casting aluminum+PC
Solar panel	5V/4.5W	5V/4.5W
Battery	3.2V/8000mAh	3.2V/8000mAh
Quantity of LED chips	30PCS	30PCS
Charge time	3-5H	3-5H
Color temperature	3000-6500K	3000-6500K
Size	Φ260*H310mm	Φ260*H300mm





PRODUCT PARAMETERS

Model	ZC-BD6001	ZC-BD3001
Material	Die-casting aluminum+PC	Die-casting aluminum+PC
Solar panel	5V/5W	5V/4.5W
Battery	3.2V/6000mAh	3.2V/6000mAh
Quantity of LED chips	30PCS	20PCS
Charge time	3-5H	3-5H
Color temperature	3000-6500K	3000-6500K
Size	200*200*H240mm	Φ230*H275mm



New









PRODUCT PARAMETERS

Model	ZC-BD0804	ZC-BD3004
Material	Die-casting aluminum+PC	Die-casting aluminum+PC
Solar panel	5V/2W	5V/2W
Battery	3.2V/3000mAh	3.2V/3000mAh
Quantity of LED chips	20PCS	20PCS
Charge time	3-5H	3-5H
Color temperature	3000-6500K	3000-6500K
Size	Φ185*H240mm	Φ185*H240mm





New















PRODUCT PARAMETERS

Model	ZC-BD0907	ZC-BD0705
Material	Die-casting aluminum+PC	Die-casting aluminum+PC
Solar panel	5V/2W	5V/2W
Battery	3.2V/3000mAh	3.2V/3000mAh
Quantity of LED chips	20PCS	20PCS
Charge time	3-5H	3-5H
Color temperature	3000-6500K	3000-6500K
Size	Φ185*H240mm	Φ185*H240mm





PRODUCT PARAMETERS

Model	ZC-ZTD0804	ZC-ZTD0705
Material	Die-casting aluminum+PC	Die-casting aluminum+PC
Solar panel	5V/2W	5V/2W
Battery	3.2V/3000mAh	3.2V/3000mAh
Quantity of LED chips	20PCS	20PCS
Charge time	3-5H	3-5H
Color temperature	3000-6500K	3000-6500K
Size	Φ185*Φ105*H225mm	Φ185*Φ105*H225mm





PRODUCT PARAMETERS

Model	ZC-ZTD0907	ZC-ZTD3004
Material	Die-casting aluminum+PC	Die-casting aluminum+PC
Solar panel	5V/2W	5V/2W
Battery	3.2V/3000mAh	3.2V/3000mAh
Quantity of LED chips	20PCS	20PCS
Charge time	3-5H	3-5H
Color temperature	3000-6500K	3000-6500K
Size	Φ185*Φ105*H225mm	Φ185*Φ105*H225mm





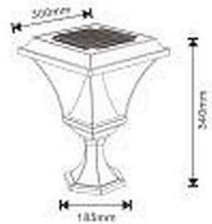





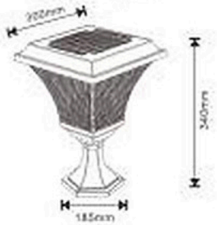

PRODUCT PARAMETERS

Model	ZC-ZTD4205	ZC-ZTD3608
Material	Die-casting aluminum+PC	Die-casting aluminum+PC
Solar panel	5V/10W	5V/10W
Battery	3.2V/12000mAh	3.2V/12000mAh
Quantity of LED chips	60PCS	60PCS
Charge time	3-5H	3-5H
Color temperature	3000-6500K	3000-6500K
Size	300*185*H340mm	300*185*H340mm





PRODUCT PARAMETERS

Model	ZC-ZTD1106-1	ZC-ZTD1106-2
Material	Die-casting aluminum+PC	Die-casting aluminum+PC
Solar panel	5V/5W	5V/5W
Battery	3.2V/8000mAh	3.2V/8000mAh
Quantity of LED chips	30PCS	30PCS
Charge time	3-5H	3-5H
Color temperature	3000-6500K	3000-6500K
Size	235*175*H275mm	235*175*H275mm













PRODUCT PARAMETERS

Model	ZC-ZTD5405	ZC-ZTD1004
Material	Die-casting aluminum+PC	Die-casting aluminum+PC
Solar panel	5V/4.5W	5V/4.5W
Battery	3.2V/8000mAh	3.2V/8000mAh
Quantity of LED chips	30PCS	12PCS
Charge time	3-5H	3-5H
Color temperature	3000-6500K	3000-6500K
Size	Φ260*Φ120*H330mm	Φ260*Φ120*H280mm







PRODUCT PARAMETERS

Model	ZC-ZTD2106	ZC-ZTD2104
Material	Die-casting aluminum+PC	Die-casting aluminum+PC
Solar panel	5V/4.5W	5V/4.5W
Battery	3.2V/8000mAh	3.2V/8000mAh
Quantity of LED chips	30PCS	30PCS
Charge time	3-5H	3-5H
Color temperature	3000-6500K	3000-6500K
Size	Φ240*Φ120*H370mm	Φ260*Φ120*H310mm





PRODUCT PARAMETERS

Model	ZC-ZTD4104	ZC-ZTD2204
Material	Die-casting aluminum+PC	Die-casting aluminum+PC
Solar panel	5V/4.5W	5V/4.5W
Battery	3.2V/8000mAh	3.2V/8000mAh
Quantity of LED chips	30PCS	30PCS
Charge time	3-5H	3-5H
Color temperature	3000-6500K	3000-6500K
Size	Φ260*Φ150*H250mm	Φ260*Φ150*H250mm

Electricity power series lamp effect picture

Garden light series



ZC-GGD2005



ZC-GGD003



ZC-TYD1104



ZC-GGD001



ZC-GGD002



ZC-GGD1105



ZC-TYD2403



ZC-TYD2705



ZC-TYD2609





ZC-GGD0805



ZC-TYD5108



ZC-TYD2808



ZC-TYD2806



ZC-TYD2505



ZC-TYD5105



ZC-TYD5106

Electricity power series lamp effect picture

Pole light series



ZC-GGD4505



ZC-GGD4105



ZC-GGD0203



ZC-GGD2806-1



ZC-GGD2806-2



ZC-GGD4205

220V E27

Lawn light series



ZC-CPD2204



ZC-CPD2104



ZC-CPD5405



ZC-CPD1004



ZC-CPD2804



ZC-CPD5004



ZC-CPD3004



ZC-CPD2106



ZC-CPD4104



ZC-CPD1106

Electricity power series lamp effect picture

Wall lamp series



ZC-BD6001



ZC-BD3001



ZC-BD2106-1



ZC-BD2106-2



ZC-BD4001



ZC-BD1104



ZC-BD4005



ZC-BD1004



ZC-BD2104

220V E27

Pillar light series



ZC-ZTD2104



ZC-ZTD2106



ZC-ZTD5405



ZC-ZTD1004



ZC-ZTD4104



ZC-ZTD2204



ZC-ZTD1106



ZC-ZTD4205